# LOWER HYBRID DRIVE LEG, ONE CHANNEL SIMPLIFIED RF PATH

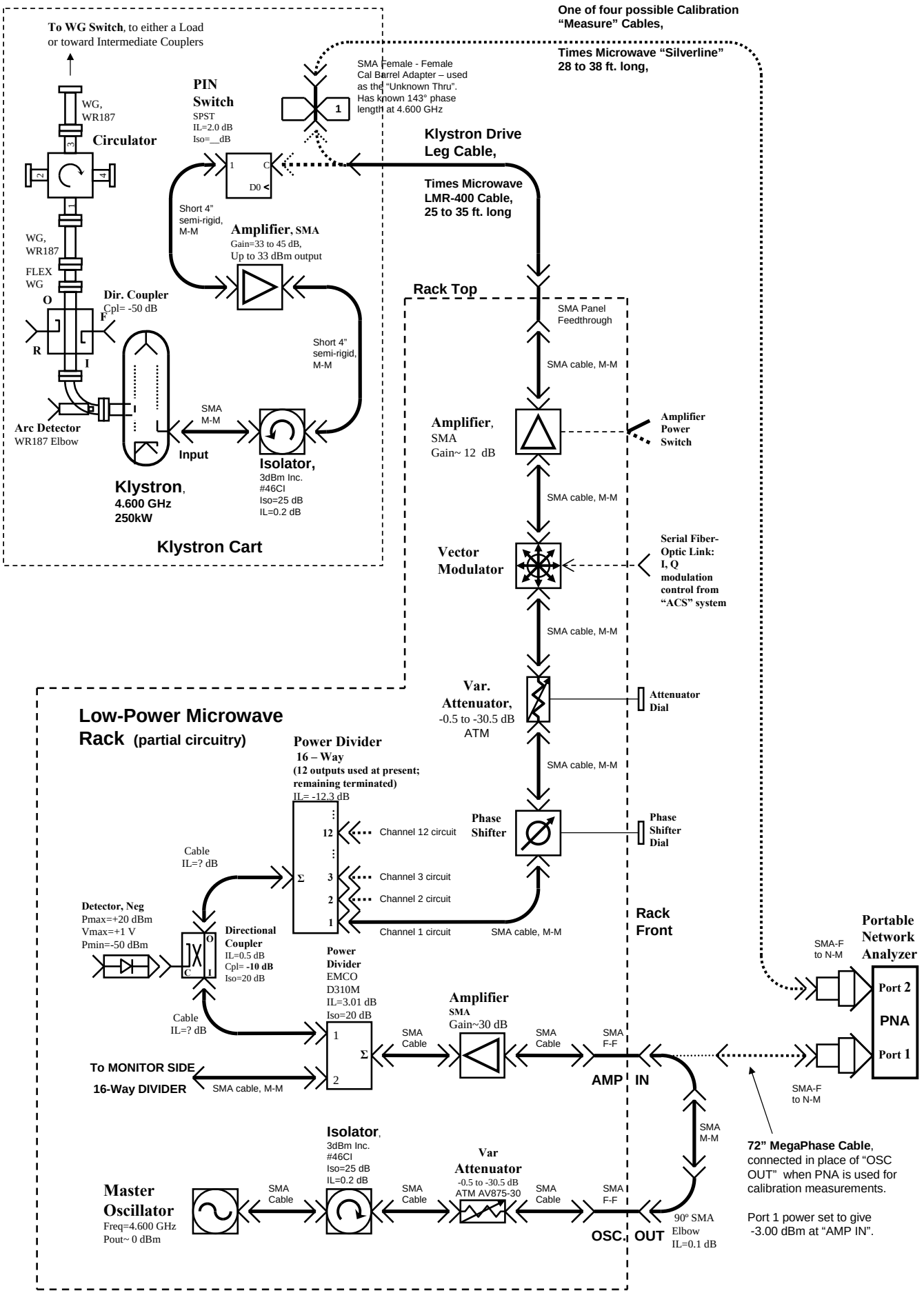

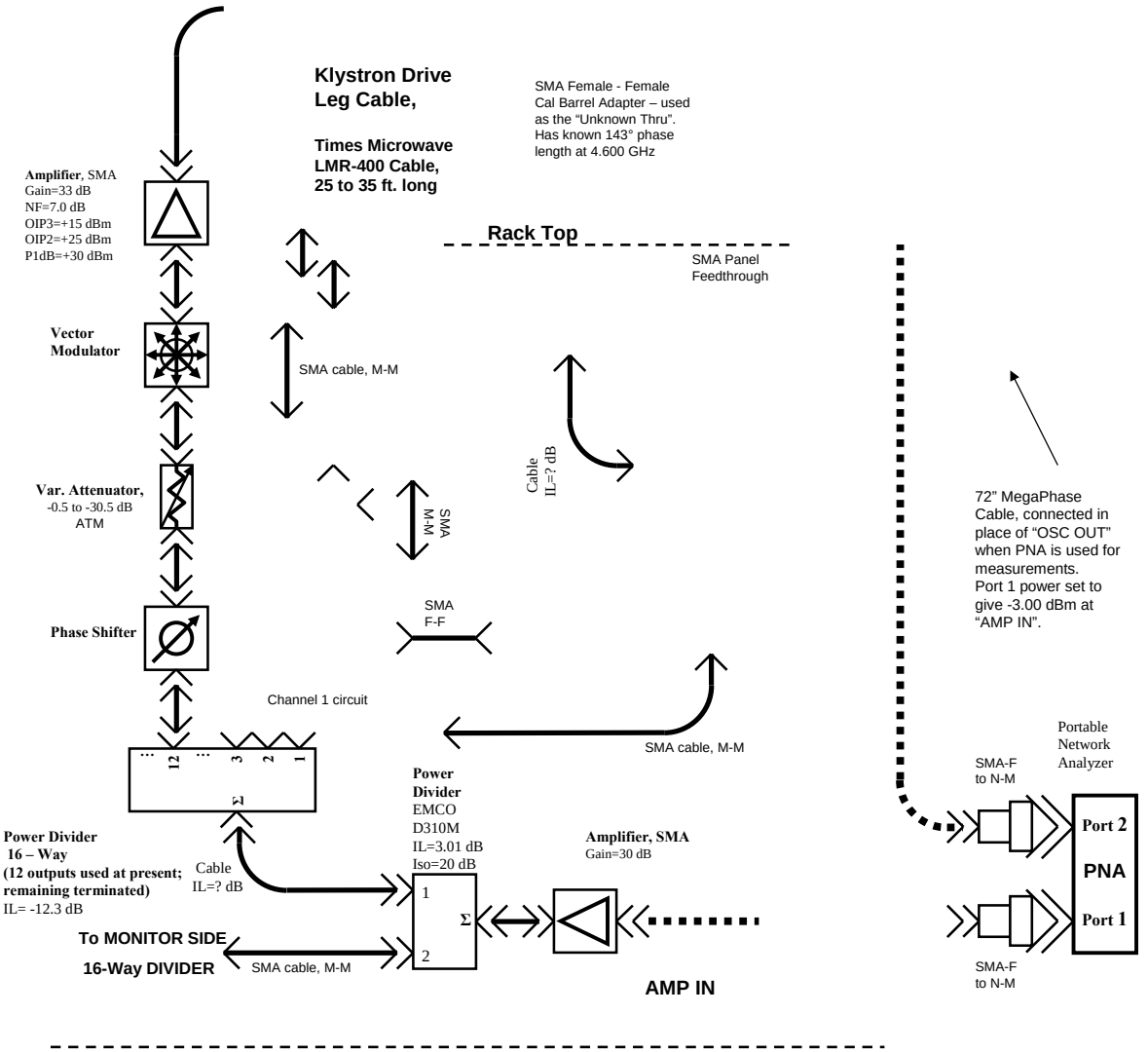
Klystron Drive Leg Cable,
Times Microwave LMR-400 Cable, 25 to 35 ft. long
SMA Female - Female Cal Barrel Adapter – used as the "Unknown Thru". Has known 143° phase length at 4.600 GHz
Amplifier, SMA Gain=33 dB NF=7.0 dB OIP3=+15 dBm OIP2=+25 dBm P1dB=+30 dBm
Rack Top
SMA Panel Feedthrough
Vector Modulator
SMA cable, M-M
Cable IL=? dB
Var. Attenuator, -0.5 to -30.5 dB ATM
SMA M-M
72" MegaPhase Cable, connected in place of "OSC OUT" when PNA is used for measurements. Port 1 power set to give -3.00 dBm at "AMP IN".
Phase Shifter
SMA F-F
Channel 1 circuit
SMA cable, M-M
Portable Network Analyzer
SMA-F to N-M
Power Divider EMCO D310M IL=3.01 dB Iso=20 dB
Power Divider 16 – Way (12 outputs used at present; remaining terminated) IL= -12.3 dB
Cable IL=? dB
Amplifier, SMA Gain=30 dB
Port 2
PNA
Port 1
To MONITOR SIDE 16-Way DIVIDER
SMA cable, M-M
AMP IN
SMA-F to N-M